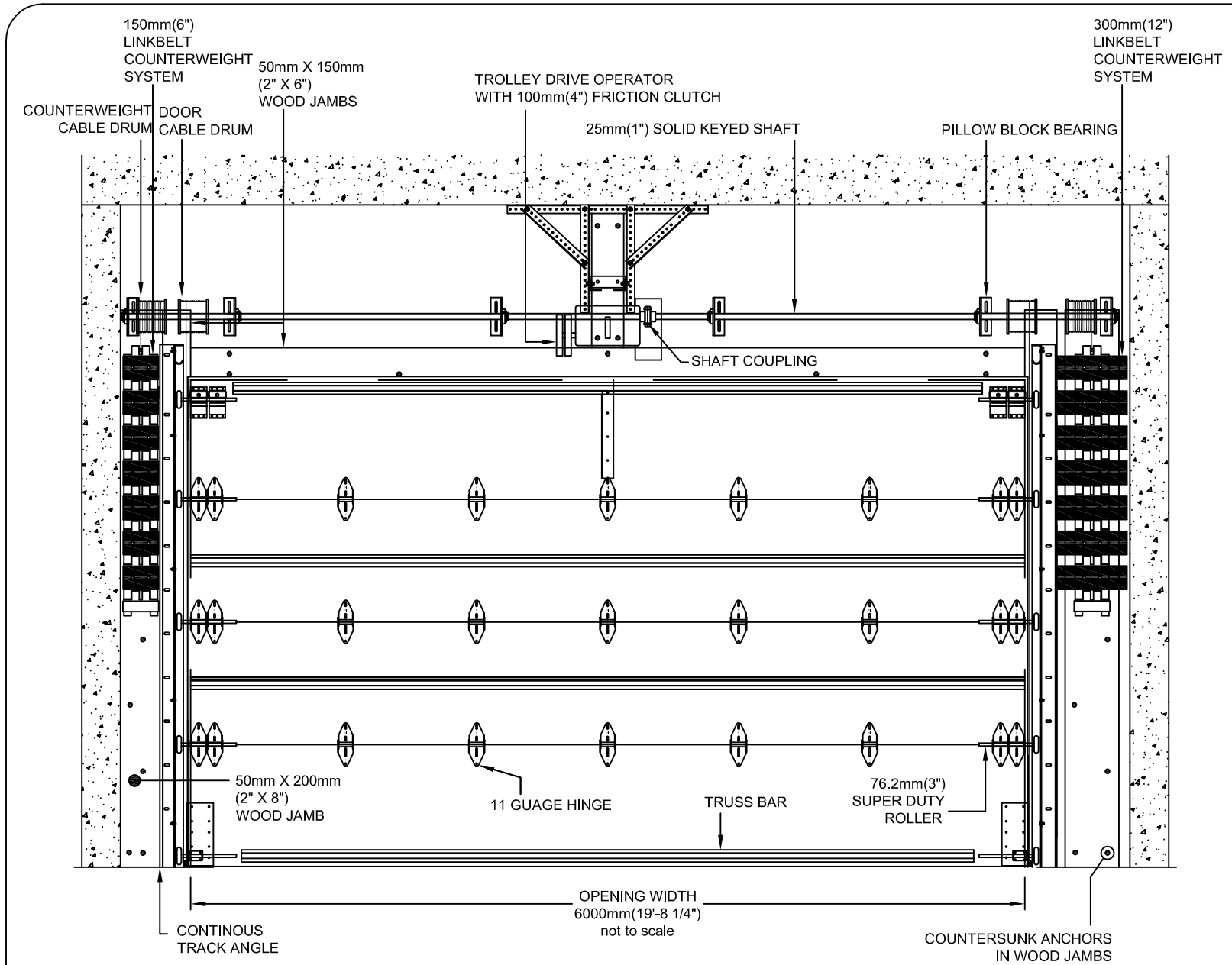

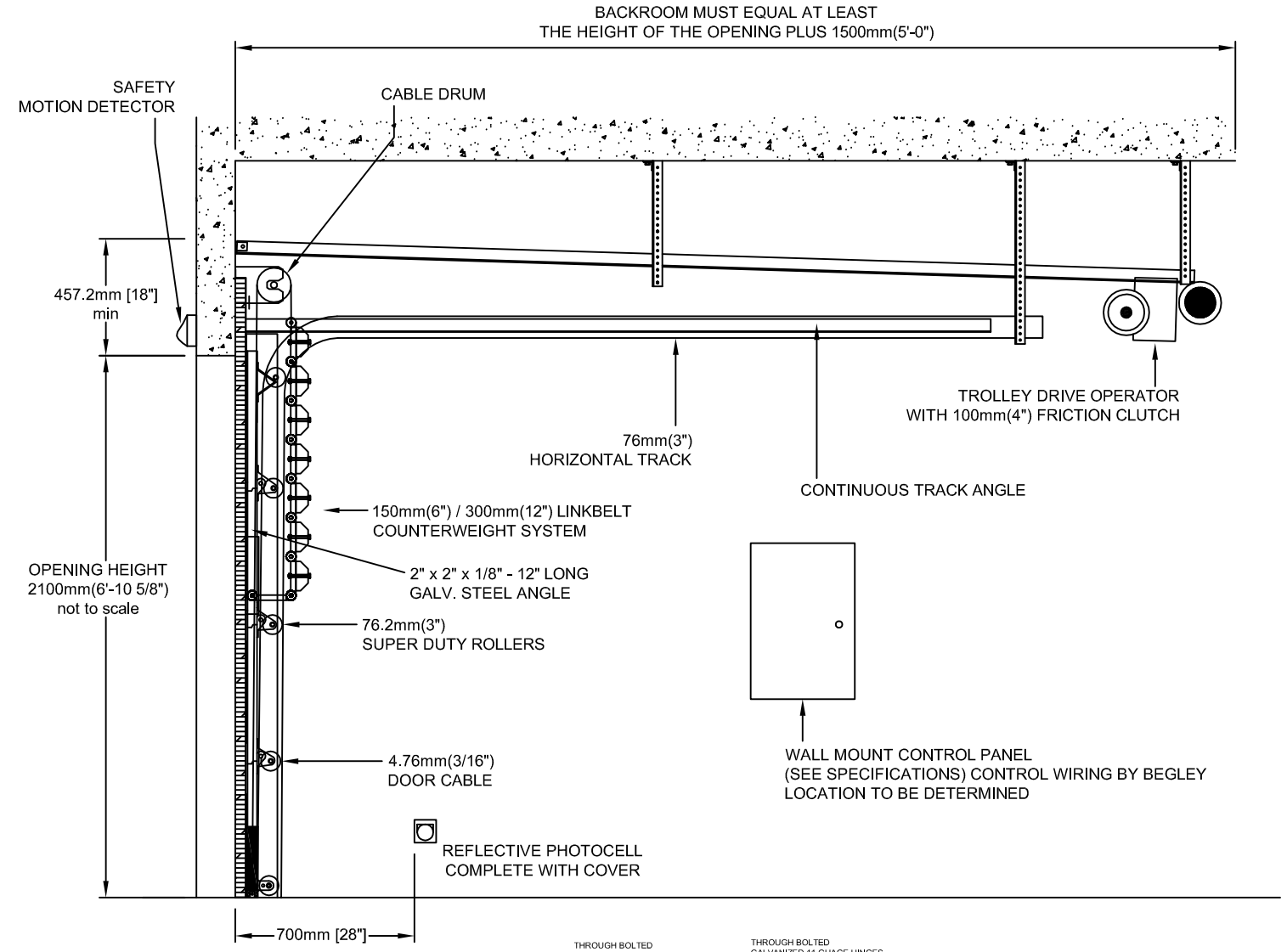

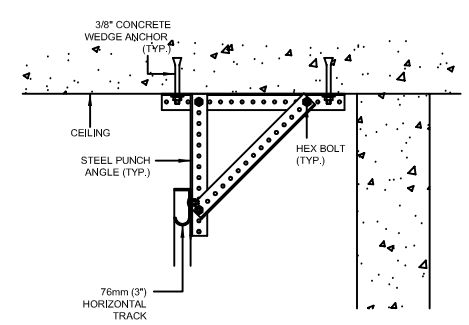

TYPICAL HANGER DETAIL

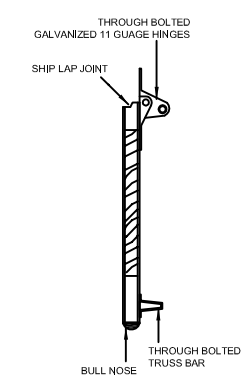

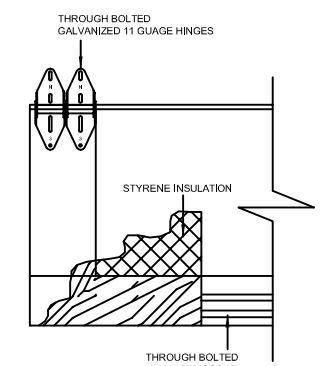

CREZONE LAMINATED FIR PLYWOOD DOOR SECTION
(1) COAT PRIMER
(2) COAT FINISH

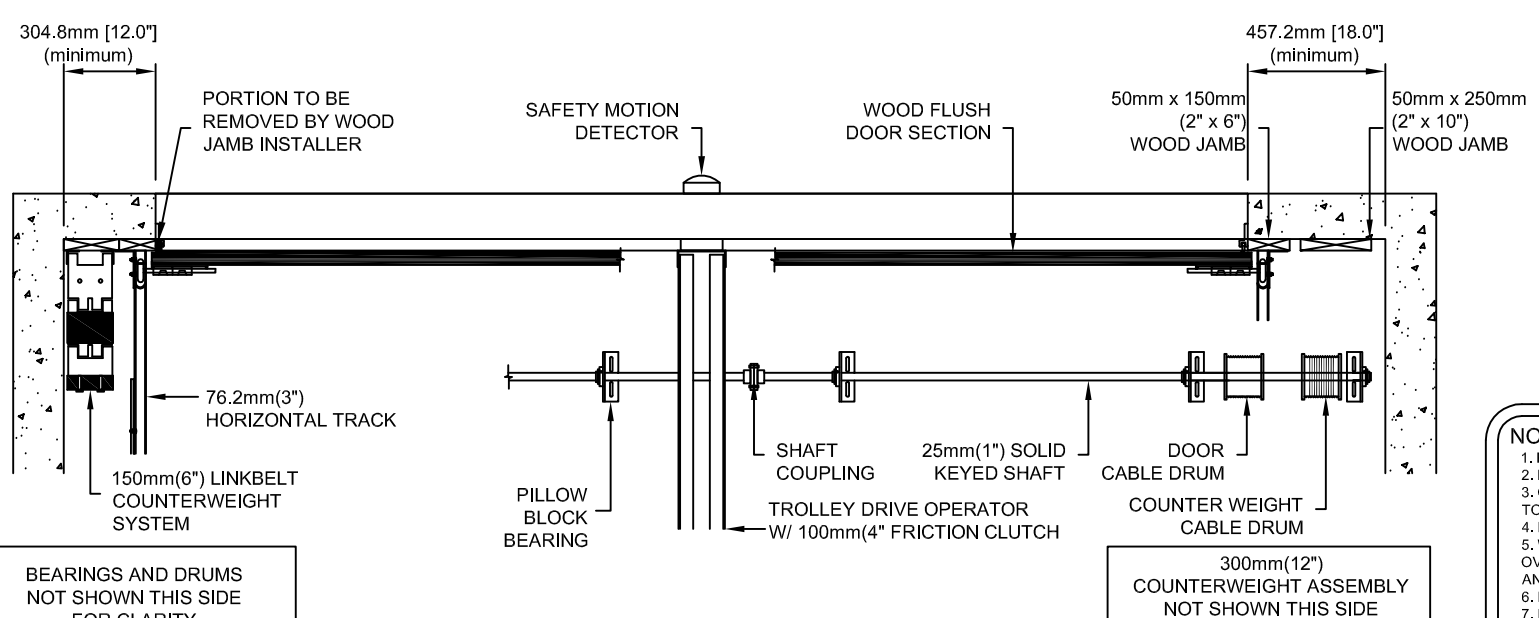

BEARINGS AND DRUMS NOT SHOWN THIS SIDE FOR CLARITY

300mm(12") COUNTERWEIGHT ASSEMBLY NOT SHOWN THIS SIDE FOR CLARITY

TROLLEY DRIVE OPERATOR ELECTRICAL REQUIREMENTS

MODEL	MC3-H
VOLTS	208
PHASE	3
HP	3/4
AMP	3.5

POWER SUPPLY AND DISCONNECT BY OTHERS

NOTES:

1. POWER SUPPLY, WIRING AND DISCONNECT SWITCH BY OTHERS
2. PREPARATION OF OPENING BY OTHERS
3. OPENING TO BE SITE MEASURED, AND VOLTAGES CONFIRMED PRIOR TO FABRICATION BY BEGLEY
4. PAINTING BY OTHERS EXCEPT WHERE SPECIFIED
5. WALL MOUNT CONTROL PANEL c/w DUAL TRANSFORMERS, FUSES, AND OVERLOAD PROTECTION. 0-60 SEC. CLOSE TIMER, 0-60 SEC. TIME DELAY, AND FULL AUTOMATIC CONTROLS BY BEGLEY
6. REFLECTIVE PHOTOCELLS
7. FREE EXIT LOOP
8. SAFETY MOTION DETECTOR INSTALED ABOVE EXTERIOR HEADER BY BEGLEY

BEGLEY OVERHEAD DOORS LIMITED
26 Holtby Avenue
Brampton, ON
L6X 2M1
Tel : 905 846 6000
Fax: 905 453 4000

JOB:
AA
AA

DOOR TYPE:
STANDARD LIFT
150mm (6") / 300mm(12") LINKBELT COUNTERWEIGHT

CONTRACTOR:
CC

ARCHITECT:
CC

DATE: DD

SCALE: NO SCALE